Cambridge International Examinations
Cambridge International General Certificate of Secondary Education (9–1)

CANDIDATE NAME	

CENTRE NUMBER						CANDIDATE NUMBER					

CO-ORDINATED SCIENCES **0973/05**

Paper 5 Practical Test **For Examination from 2019**

SPECIMEN PAPER

2 hours

Candidates answer on the Question Paper.

Additional Materials: As listed in the Confidential Instructions

READ THESE INSTRUCTIONS FIRST

Write your Centre number, candidate number and name on all the work you hand in.
Write in dark blue or black pen.
You may use an HB pencil for any diagrams or graphs.
Do not use staples, paper clips, glue or correction fluid.
DO **NOT** WRITE IN ANY BARCODES.

Answer **all** questions.
Electronic calculators may be used.
You may lose marks if you do not show your working or if you do not use appropriate units.
Practical notes are provided on page 17.

At the end of the examination, fasten all your work securely together.
The number of marks is given in brackets [ ] at the end of each question or part question.

This document consists of **17** printed pages and **1** blank page.

© UCLES 2017

1 You are going to investigate what happens when a celery stalk is placed in coloured water.

- Take the piece of celery stalk and cut it approximately in half as shown in Fig. 1.1.

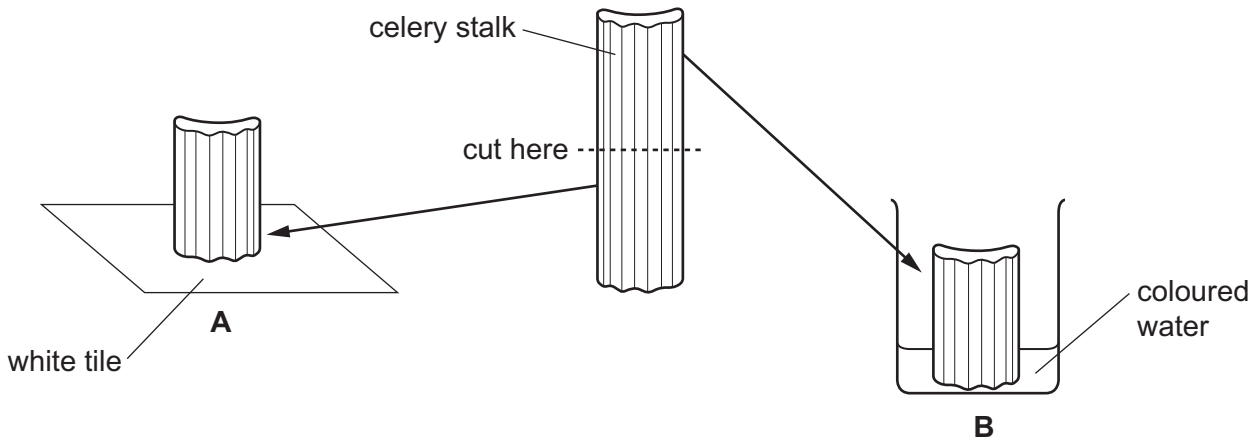

Fig. 1.1 (not to scale)

- Place one half of the celery stalk, **A**, onto the white tile with the cut face upwards.
- Place the other half of the celery stalk, **B**, in the beaker so that its cut face is in the coloured water. Leave it for at least five minutes.
- Continue with the rest of the question while you are waiting.

(a) In the space below, make a large, accurate drawing of the cross-section (cut-end) of celery stalk **A**.

[2]

(b) • After 5 minutes, remove celery stalk **B** from the coloured water and cut a 2 mm slice from the end that was in the coloured water.

• Place this slice on the white tile with the newly cut surface upwards.

• Examine this upper surface using the hand lens.

(i) On your drawing in **(a)** draw the stained areas you can now see clearly and label one of these with a label line and the letter **S**. [2]

(ii) Name the tissue that has become stained and state what can be concluded about its function.

name .....

function .....
[2]

(c) A student uses pieces of celery stalk and coloured water to investigate the effect of temperature on the speed of movement of the coloured water.

The student records the time taken for the coloured water to reach the top of the stalks at different temperatures.

(i) Suggest suitable values of temperature for this investigation.

.....

..... [2]

(ii) State **one** variable that should be kept constant in this investigation.

..... [1]

[Total: 9]

2 You are going to investigate the vitamin C content of a fruit juice.

DCPIP is a dark blue chemical that is decolourised by vitamin C.

The higher the concentration of vitamin C in a solution, the fewer drops of the solution are needed to decolourise DCPIP.

You are provided with a set of four solutions containing different concentrations of vitamin C and a fruit juice of an unknown vitamin C concentration.

(a)
- Using a dropping pipette, place two drops of DCPIP into each of five wells of a white spotting tile.
- Start with the 1.00% solution of vitamin C. Use a clean dropping pipette to carefully add drops to one of the wells with the DCPIP and count how many drops are needed to decolourise it.
- Immediately record your result in Table 2.1.
- You should ignore any colour changes seen 5 minutes after adding the vitamin C to the DCPIP.
- Repeat with the other solutions of different concentrations of vitamin C and then the fruit juice, using a clean dropping pipette each time.
- If a solution of vitamin C does not decolourise, stop when the well is full. Record the number of drops and write 'maximum' next to it.

Table 2.1

percentage concentration of vitamin C	number of drops needed to decolourise DCPIP
1.00%	
0.75%	
0.50%	
0.25%	
fruit juice	

[4]

© UCLES 2017

(b) **(i)** On the grid provided, plot the data to show the number of drops needed to decolourise DCPIP against percentage concentration of vitamin C.

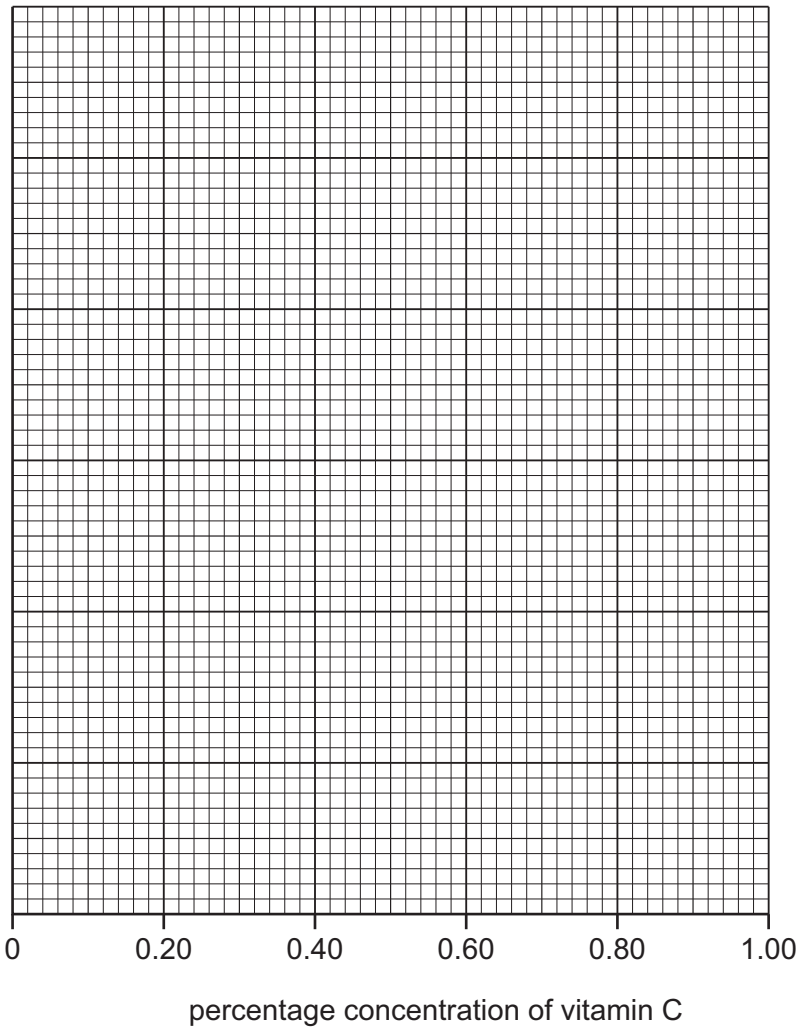

[2]

(ii) Draw the best-fit straight line. [1]

(c) Use your graph to estimate the percentage concentration of vitamin C in the fruit juice.

Mark on the graph to show how you worked this out.

percentage concentration of vitamin C = ...% [2]

(d) State **one** safety precaution you took when carrying out this procedure.

..... [1]

(e) Suggest **one** way of improving the reliability of this experiment.

.....

..... [1]

[Total: 11]

3 Solid **H** is a mixture of two metal oxides, **J** and **K**.

You are going to carry out a series of experiments and suggest the identities of the metal oxides.

(a) Experiment to identify **J**.

- Place two large spatula loads of solid **H** into a small beaker and add approximately 25 cm^3 distilled water.
- Stir well for 30 seconds.
- Filter the mixture to collect a test-tube half-full of filtrate for use in **(a)(i)**. Discard any excess filtrate.
- The residue in the filter paper should be placed in a small clean beaker.
- To the residue, add 25 cm^3 dilute nitric acid and stir the mixture. Keep this for use in **(b)**.

(i) To the half-full test-tube of filtrate, add a few drops of full range Universal Indicator.

Record the colour of the resulting mixture and its pH.

colour .....

pH .....
[1]

(ii) The filtrate turns milky when carbon dioxide is bubbled through it. This shows that the filtrate is calcium hydroxide solution (limewater).

Using this information and the information in **(a)(i)**, suggest the identity of **J**.

J is ..... [1]

(iii) Using your observation in **(a)(i)**, classify the metallic oxide **J**.

classification of oxide **J** ..... [1]

(b) Experiment to identify **K**.

- If the residue from **(a)** has not all dissolved in the dilute nitric acid, warm the beaker gently and stir the mixture carefully. Do **not** boil the mixture.
- If some of the solid has not dissolved after warming, filter the mixture into two test-tubes so that they are each one-third full.

(i)
- Transfer the liquid in one of the test-tubes to a large test-tube. Add sodium hydroxide solution slowly until the large test-tube is approximately two-thirds full.
- Use red litmus paper to check that the mixture is alkaline. If not, add more sodium hydroxide solution until the mixture is alkaline. Stir the mixture carefully.

Record your observation.

observation .....

..... [1]

(ii) To the liquid in the **other** test-tube add ammonia solution slowly until there is no further change.

Record your observations.

observations .....

.....

.....

..... [2]

(iii) Use your observations in **(b)(i)** and **(b)(ii)** to identify the cation present in **K**.

cation present in **K** is ..... [1]

[Total: 7]

4 You are going to find out how much thermal energy (heat) is given out in the reaction between solid **L** and solution **N** by measuring the temperature rise that occurs as they react.

(a) (i) Measure the temperature of solution **N**.

In Table 4.1 record this value, to the nearest half degree, in the appropriate space for time at 0 min. [1]

Table 4.1

time / min	temperature / °C
0	
0.5	
1.0	
1.5	
2.0	
2.5	
3.0	
3.5	
4.0	
4.5	
5.0	
5.5	
6.0	
6.5	
7.0	

(ii)
- Place all of the solid **L** into the plastic cup.
- Measure 25 cm^3 solution **N** using the measuring cylinder.
- Add this quickly to solid **L** in the plastic cup and immediately start the stopwatch.
- Stir the mixture thoroughly.
- Measure the temperature of the mixture every half minute for seven minutes, stirring the mixture continuously.

Record in Table 4.1 the values to the nearest half degree. [2]

(b) (i) Using the data in Table 4.1, calculate the maximum temperature rise, ΔT, in this reaction.

ΔT = ... °C [1]

(ii) Calculate the thermal energy, E, given out by the reaction using the formula shown.

$$E = \text{volume of solution } \mathbf{N} \times 4.2 \times \Delta T$$

Give your answer to two significant figures.

E = ... J [1]

(c) During the experiment thermal energy is transferred to the surroundings so the temperatures recorded are not as high as they should be.

Suggest two modifications to the apparatus (**not** the chemicals) that will mean that less thermal energy is transferred to the surroundings during the experiment.

modification 1 .....

.....

modification 2 .....

.....
[2]

[Total: 7]

5 A student is investigating the reaction between magnesium ribbon and hydrochloric acid.

He finds out that the reaction produces soluble magnesium chloride and hydrogen gas.

He wants to find out what happens to the speed of the reaction if he changes the concentration of hydrochloric acid.

Plan an investigation to find out how the concentration of hydrochloric acid affects the rate of this reaction.

You are not required to carry out this experiment.

In your answer, include:

- the apparatus needed, including a labelled diagram if you wish
- a brief description of the method, including how you will control variables and any safety precautions
- the measurements you will make
- how you will process your results
- how you will use your results to draw a conclusion.

.....

.....

.....

.....

.....

.....

.....

.....

.....

.....

.....

.....

.....

..... [6]

[Total: 6]

© UCLES 2017

Question 6 starts on page 12

6 The spring constant, k, of a spring is a measure of how stiff the spring is.

You are going to find the spring constant, k, of a spring.

- Set up the apparatus as shown in Fig. 6.1 with a 0.10 kg mass (100 g) on the spring.

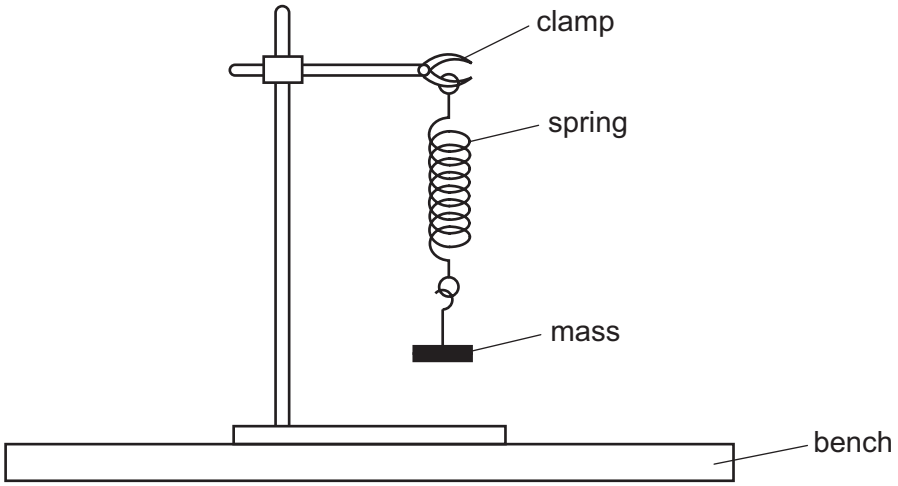

Fig. 6.1

(a) • Pull the mass down a small distance and release it. The mass oscillates up and down. The period T of the oscillations is the time taken for one complete oscillation.

In **one** complete oscillation the mass will move from its lowest position to its highest position and then back to its lowest position.

- Measure the time taken t for five complete oscillations.

Record in Table 6.1 this time to the nearest 0.1 s.

- Repeat this for masses of 0.20 kg, 0.30 kg, 0.40 kg and 0.50 kg.

- Use your times for five complete oscillations to calculate T, the period (the time for one complete oscillation) for each of the masses.

Record in Table 6.1 these values for T to the nearest 0.1 s.

- Calculate the values of T^2.

Record in Table 6.1 these values for T^2 to the nearest 0.01 s^2.

Table 6.1

mass m / kg	time for five complete oscillations t / s	period T / s	T^2 / s^2
0.10			
0.20			
0.30			
0.40			
0.50			

[4]

(b) The value of the spring constant k can be calculated using the equation shown.

$$k = \frac{39.5 \times m}{T^2}$$

(i) Calculate the value of k using the data in the table for a mass of 0.10 kg.

k = ... [1]

(ii) Calculate the value of k using the data in the table for a mass of 0.50 kg.

k = ... [1]

(iii) Suggest how **all** of the results in Table 6.1 could be used to determine the value of the spring constant k.

..... [1]

(c) Suggest **one** modification that could be made to the experiment to give a more accurate value for the spring constant k of the spring.

.....

..... [1]

[Total: 8]

7 You are going to find the density of modelling clay.

You are provided with modelling clay and a 30 cm ruler.

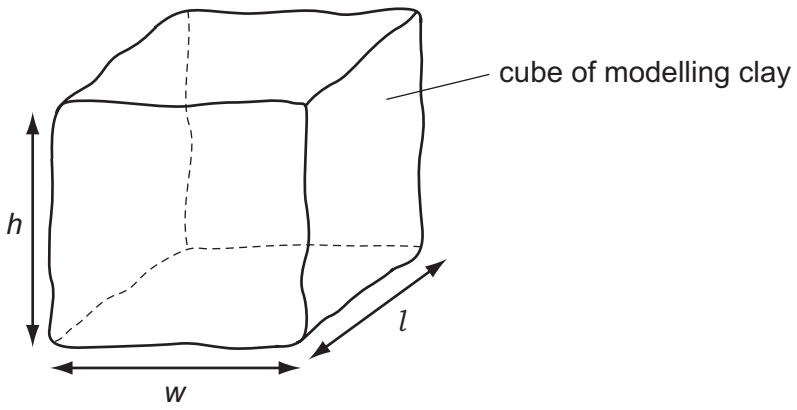

Fig. 7.1

(a) **(i)** Mould the modelling clay to make a cube, as shown in Fig. 7.1.

Measure the length *l*, width *w*, and height *h*, of the cube to the nearest 0.1 cm and record your results.

l = ... cm

w = ... cm

h = ... cm
[2]

(ii) Calculate the volume, *V,* of your cube using the equation shown.

$$V = l \times w \times h$$

V = ... cm^3 [1]

(b) You are going to set up the balance shown in Fig. 7.2.

A 50 g mass has been secured to the metre rule. Its position is fixed with its centre over the 10.0 cm mark. Do **not** attempt to move the mass during the experiment.

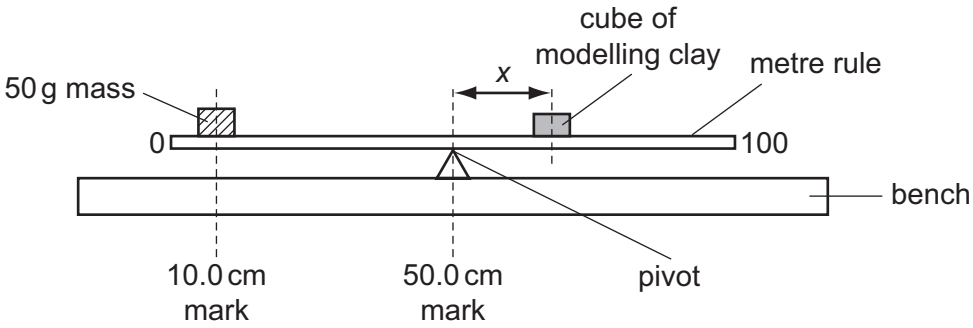

Fig. 7.2

- Place the pivot directly under the 50.0 cm mark, as shown in Fig. 7.2.
- Place the cube of modelling clay you made in **(a)(i)** onto the metre rule and adjust its position until the rule is just balanced.
- Measure, to the nearest 0.1 cm, the distance *x* from the centre of the cube to the 50.0 cm mark on the rule.

(i) Record the distance *x*.

x = ... cm [2]

(ii) Calculate the mass *m* of the cube of modelling clay using the equation shown.

$$m = \frac{2000}{x}$$

m = ... g [1]

(iii) Calculate the density *d*, of the modelling clay using the equation shown.

$$d = \frac{m}{V}$$

Record your answer to an appropriate number of significant figures.

State the unit.

d = ... unit = ... [3]

(c) **(i)** Describe **one** source of uncertainty in the procedure or limitation of the procedure for this experiment.

.....

..... [1]

(ii) Suggest **one** improvement that could be made to this experiment to overcome your stated uncertainty or limitation in **(c)(i)**.

.....

..... [1]

(d) The experiment is repeated but this time the modelling clay is made into a long thin cylinder instead of a cube.

Suggest and explain what effect this would have on the density of the modelling clay.

effect .....

explanation .....
[1]

[Total: 12]

© UCLES 2017

NOTES FOR USE IN QUALITATIVE ANALYSIS

Test for anions

anion	test	test result
carbonate (CO_3^{2-})	add dilute acid	effervescence, carbon dioxide produced
chloride (Cl^-) [in solution]	acidify with dilute nitric acid, then add aqueous silver nitrate	white ppt.
bromide (Br^-) [in solution]	acidify with dilute nitric acid, then add aqueous silver nitrate	cream ppt.
nitrate (NO_3^-) [in solution]	add aqueous sodium hydroxide then aluminium foil; warm carefully	ammonia produced
sulfate (SO_4^{2-}) [in solution]	acidify, then add aqueous barium nitrate	white ppt.

Test for aqueous cations

cation	effect of aqueous sodium hydroxide	effect of aqueous ammonia
ammonium (NH_4^+)	ammonia produced on warming	–
calcium (Ca^{2+})	white ppt., insoluble in excess	no ppt., or very slight white ppt.
copper (Cu^{2+})	light blue ppt., insoluble in excess	light blue ppt., soluble in excess, giving a dark blue solution
iron(II) (Fe^{2+})	green ppt., insoluble in excess	green ppt., insoluble in excess
iron(III) (Fe^{3+})	red-brown ppt., insoluble in excess	red-brown ppt., insoluble in excess
zinc (Zn^{2+})	white ppt., soluble in excess giving a colourless solution	white ppt., soluble in excess, giving a colourless solution

Test for gases

gas	test and test results
ammonia (NH_3)	turns damp, red litmus paper blue
carbon dioxide (CO_2)	turns limewater milky
chlorine (Cl_2)	bleaches damp litmus paper
hydrogen (H_2)	‘pops’ with a lighted splint
oxygen (O_2)	relights a glowing splint

Flame tests for metal ions

metal ion	flame colour
lithium (Li^+)	red
sodium (Na^+)	yellow
potassium (K^+)	lilac
copper(II) (Cu^{2+})	blue-green

© UCLES 2017

BLANK PAGE

Permission to reproduce items where third-party owned material protected by copyright is included has been sought and cleared where possible. Every reasonable effort has been made by the publisher (UCLES) to trace copyright holders, but if any items requiring clearance have unwittingly been included, the publisher will be pleased to make amends at the earliest possible opportunity.

Cambridge International Examinations is part of the Cambridge Assessment Group. Cambridge Assessment is the brand name of University of Cambridge Local Examinations Syndicate (UCLES), which is itself a department of the University of Cambridge.

© UCLES 2017